PHASE I SEDIMENT STORAGE :

ROCK OUTLET

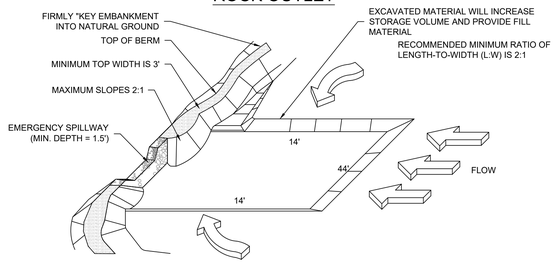

CROSS SECTION

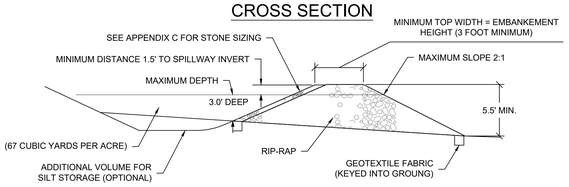

PROFILE THROUGH EMBANKMENT

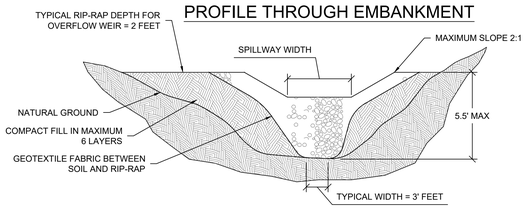

Sd4-C

TEMPORARY SEDIMENT TRAP #1

NOT TO SCALE

PHASE I SEDIMENT STORAGE DETAILS:

PHASE 1 DISTURBED AREA & SEDIMENT STORAGE REQUIREMENTS
REQUIREMENTS: 0.66 ACRES X 67 = 44.2 CUBIC YARDS
DISTURBED AREA TRAP #1: 0.66 AC - PROVIDED: 44.5 CY
TOTAL **0.66 AC** **44.5 CY**

BLANKET AND MATTING CROSS-SECTIONS

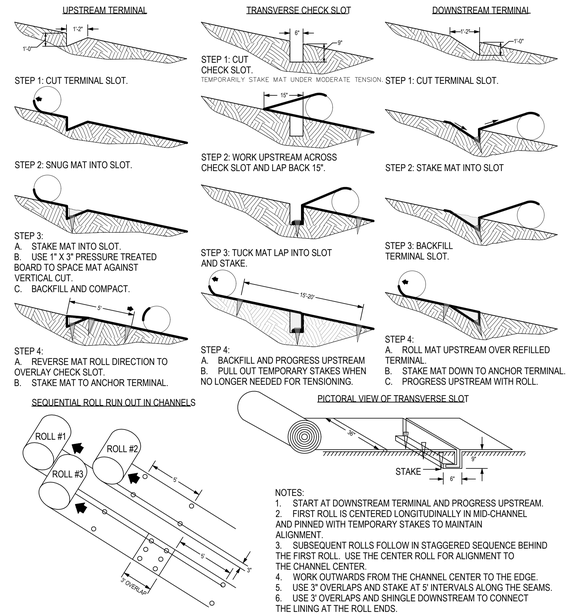

NOTES:
1. START AT DOWNSTREAM TERMINAL AND PROGRESS UPSTREAM.
2. FIRST ROLL IS CENTERED LONGITUDINALLY IN MID-CHANNEL AND PINNED WITH TEMPORARY STAKES TO MAINTAIN ALIGNMENT.
3. SUBSEQUENT ROLLS FOLLOW IN STAGGERED SEQUENCE BEHIND THE FIRST ROLL. USE THE CENTER ROLL FOR ALIGNMENT TO THE CHANNEL CENTER.
4. WORK OUTWARDS FROM THE CHANNEL CENTER TO THE EDGE.
5. USE 3' OVERLAPS AND STAKE AT 5' INTERVALS ALONG THE SEAMS.
6. USE 3' OVERLAPS AND SHINGLE DOWNSTREAM TO CONNECT THE LINING AT THE ROLL ENDS.

Ss

SLOPE STABILIZATION DETAIL

NOT TO SCALE

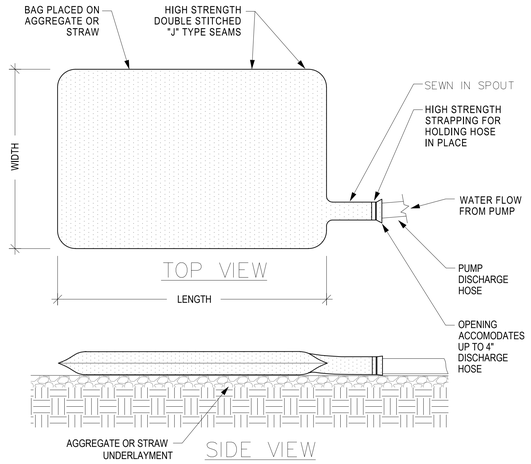

NOTE:
DETAIL BASED ON THE "DIRTBAG" BY ACF ENVIRONMENTAL.
CONTRACTOR MAY USE AN APPROVED EQUAL PERFORMING PRODUCT
THE PUMPING OF ALL PONDED RUNOFF SHALL BE REQUIRED TO USE BMP FOR SEDIMENT CONTROL.
MAXIMUM FLOW RATE OF DIRTBAG IS 1,500gpm
DIRTBAG CONTENTS MAY BE DISPOSED OF ONSITE AT AN APPROVED LOCATION.
CONTENTS MUST BE MULCHED AND SEEDED. ALL VISIBLE FABRIC MUST BE REMOVED.

DETAIL OF PUMPED SEDIMENT REMOVAL SYSTEM

NOT TO SCALE

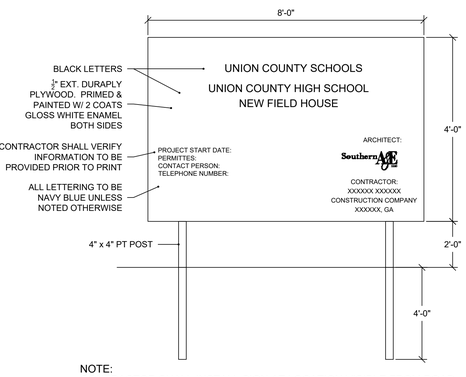

NOTE:
CONTRACTOR SHALL INSTALL SIGN AT LOCATION VISIBLE FROM ROAD.

ES&PC SITE SIGN

NOT TO SCALE

PHASE II SEDIMENT STORAGE DETAILS:

PHASE II SEDIMENT STORAGE DURING BUILDING CONSTRUCTION:

TO BE SHOWN ON THE EROSION AND SEDIMENT CONTROL PLAN
If the EXCAVATED INLET SEDIMENT TRAP is used, show the following information:

1. DRAINAGE AREA = 19 ac
2. Required sediment storage = 67 cy/ac * drainage area
   Required sediment storage = 67 cy/ac * 19 ac
   REQUIRED SEDIMENT STORAGE = 12.7 cy = 343 cf
3. Assume excavation DEPTH (minimum of 1.5 ft.) = 2.5 ft
4. Assume SLOPE OF SIDES (shall not be steeper than 2:1) = 2 :1
5. Determine required surface area
   SAmin = Required sediment storage / excavation depth
   SAmin = 343 cf / 2.5 ft
   SAmin = 137.2 sf
6. Assume shape of excavation and determine dimensions.
   (A rectangular shape with 2:1 length to width ratio is recommended.)
   SHAPE: RECT
   DIMENSIONS: l = 13 ft w = 11 ft diameter (if applicable) = – ft

Provide a detail showing the depth, length and width, or diameter (if applicable,) and side slopes of the excavation.

(Sd-F SEDIMENT STORAGE UNDERCUT DETAIL) TO BE INSTALLED AT INDICATED INLETS

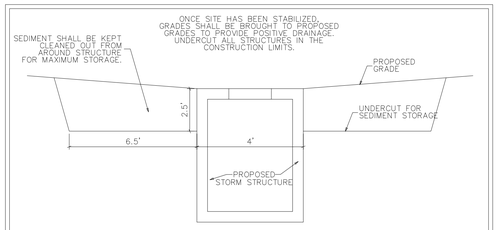

Sd2-F

INLET SEDIMENT TRAP #1 DETAIL

NOT TO SCALE

PHASE II SEDIMENT STORAGE DETAILS:

PHASE II SEDIMENT STORAGE DURING BUILDING CONSTRUCTION:

TO BE SHOWN ON THE EROSION AND SEDIMENT CONTROL PLAN
If the EXCAVATED INLET SEDIMENT TRAP is used, show the following information:

1. DRAINAGE AREA = 22 ac
2. Required sediment storage = 67 cy/ac * drainage area
   Required sediment storage = 67 cy/ac * 22 ac
   REQUIRED SEDIMENT STORAGE = 14.7 cy = 397 cf
3. Assume excavation DEPTH (minimum of 1.5 ft.) = 2.5 ft
4. Assume SLOPE OF SIDES (shall not be steeper than 2:1) = 2 :1
5. Determine required surface area
   SAmin = Required sediment storage / excavation depth
   SAmin = 397 cf / 2.5 ft
   SAmin = 158.8 sf
6. Assume shape of excavation and determine dimensions.
   (A rectangular shape with 2:1 length to width ratio is recommended.)
   SHAPE: RECT
   DIMENSIONS: l = 27 ft w = 6 ft diameter (if applicable) = – ft

Provide a detail showing the depth, length and width, or diameter (if applicable,) and side slopes of the excavation.

(Sd-F SEDIMENT STORAGE UNDERCUT DETAIL) TO BE INSTALLED AT INDICATED INLETS

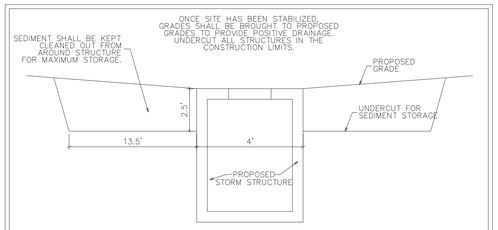

Sd2-F

INLET SEDIMENT TRAP #2 DETAIL

NOT TO SCALE

PHASE II SEDIMENT STORAGE DETAILS:

PHASE II SEDIMENT STORAGE DURING BUILDING CONSTRUCTION:

TO BE SHOWN ON THE EROSION AND SEDIMENT CONTROL PLAN
If the EXCAVATED INLET SEDIMENT TRAP is used, show the following information:

1. DRAINAGE AREA = 27 ac
2. Required sediment storage = 67 cy/ac * drainage area
   Required sediment storage = 67 cy/ac * 27 ac
   REQUIRED SEDIMENT STORAGE = 18.1 cy = 489 cf
3. Assume excavation DEPTH (minimum of 1.5 ft.) = 2.5 ft
4. Assume SLOPE OF SIDES (shall not be steeper than 2:1) = 2 :1
5. Determine required surface area
   SAmin = Required sediment storage / excavation depth
   SAmin = 489 cf / 2.5 ft
   SAmin = 195.6 sf
6. Assume shape of excavation and determine dimensions.
   (A rectangular shape with 2:1 length to width ratio is recommended.)
   SHAPE: RECT
   DIMENSIONS: l = 33 ft w = 6 ft diameter (if applicable) = – ft

Provide a detail showing the depth, length and width, or diameter (if applicable,) and side slopes of the excavation.

(Sd-F SEDIMENT STORAGE UNDERCUT DETAIL) TO BE INSTALLED AT INDICATED INLETS

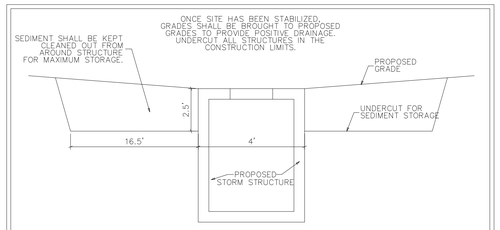

Sd2-F

INLET SEDIMENT TRAP #3 DETAIL

NOT TO SCALE

CONSTRUCTION DETAILS

Scale: VARIES

SA&E PROJECT NUMBER	01-697-027
BID PACKAGE	BP-1
ISSUED FOR CONSTRUCTION	04-08-2019

REVISIONS

R #	Doc #	DATE:

SouthernA&E LLC
7951 Troon Circle
Austell, Ga 30168
(770) 819-7777
architects & engineers

© COPYRIGHT 2019 BY SOUTHERN A&E, LLC. ALL RIGHTS RESERVED. THIS DOCUMENT IS THE PROPERTY OF SOUTHERN A&E, LLC AND SHALL NOT BE COPIED OR REPRODUCED IN WHOLE OR IN PART WITHOUT EXPRESSED WRITEN CONSENT FROM SOUTHERN A&E, LLC.

NEW:

UNION COUNTY FIELDHOUSE

400 WELBORN STREET BLAIRSVILLE, GA 30512

UNION COUNTY SCHOOLS

124 HUGHES STREET BLAIRSVILLE, GA 30512

STATE OF GEORGIA — GREGORY SCHILLER — CERTIFICATE No: 21815 — REGISTERED ARCHITECT

GEORGIA — REGISTERED LANDSCAPE ARCHITECT — REBECCA REAGAN KIRK

DRAWING NUMBER

C503