VAV Packaged DX Pad Mount Unit Sequence of Operation (VAV RTU)

The Building Management System (BMS) will send the controller a user definable run schedule. If the BMS is not present, or communication is lost, the controller will operate using last known sequence.
Run Conditions - Requested::
The unit shall run whenever:
Any zone is occupied.
OR a definable number of unoccupied zones need heating or cooling.
Supply Fan Operation:
The supply fan shall run anytime the unit is commanded to run, unless shutdown on safeties. The supply fan shall be enabled while in the occupied mode and cycled on during the unoccupied mode. A current switch shall monitor fan operation.
Supply fan Alarms:
Alarms shall be provided as follows:
- Failure: Commanded on, but the status is off.
- Running in Hand: Commanded off, but the status is on.
Supply Air Duct Static Pressure Control:
The controller shall measure duct static pressure and shall modulate the supply fan VFD speed to maintain a duct static pressure setpoint of 1.5 in H2O (adj.). The supply fan VFD speed shall not drop below 30 % (adj.).
Alarms shall be provided as follows:
High Supply Air Static Pressure: If the supply air static pressure is 25% (adj.) greater than setpoint.
Low Supply Air Static Pressure: If the supply air static pressure is 25% (adj.) less than setpoint.
Supply Fan VFD Fault.
Supply Air Temperature Setpoint - Optimized:
The controller shall monitor the supply air temperature and shall maintain a supply air temperature setpoint reset based on zone cooling and heating requirements.
The supply air temperature setpoint shall be reset for cooling based on zone cooling requirements as follows:
The initial supply air temperature setpoint shall be 56°F (adj.).
As cooling demand increases, the setpoint shall incrementally reset down to a minimum of 53°F (adj.).
As cooling demand decreases, the setpoint shall incrementally reset up to a maximum of 72°F (adj.) .
If more zones need heating than cooling, then the supply air temperature setpoint shall be reset for heating as follows:
The initial supply air temperature setpoint shall be 75°F (adj.).
As heating demand increases, the setpoint shall incrementally reset up to a maximum of 85°F (adj.).
As heating demand decreases, the setpoint shall incrementally reset down to a minimum of 72°F (adj.).
Cooling Stages:
The controller shall measure the supply air temperature and stage the cooling to maintain its cooling setpoint. To prevent short cycling, there shall be a user definable (adj.) delay between stages, and each stage shall have a user definable (adj.) minimum runtime.
The cooling shall be enabled whenever:
Outside air temperature is greater than 60°F (adj.).
AND the economizer (if present) is disabled or fully open.
AND the supply fan status is on.
AND the heating is not active.
Alarms shall be provided as follows:
High Supply Air Temp: If the supply air temperature is 5°F (adj.) greater than setpoint.
Gas Heating Stages:
The controller shall measure the supply air temperature and stage the heating to maintain its heating setpoint. To prevent short cycling, there shall be a user definable (adj.) delay between stages, and each stage shall have a user definable (adj.) minimum runtime.
The heating shall be enabled whenever:
Outside air temperature is less than 60°F (adj.).
AND the supply fan status is on.
AND the cooling is not active.
The heating stages shall run for freeze protection whenever:
Supply air temperature drops from 40°F to 35°F (adj.).
AND the supply fan status is on.
Alarms shall be provided as follows:
Low Supply Air Temp: If the supply air temperature is 5°F (adj.) less than setpoint.
Economizer:
The controller shall measure the mixed air temperature and modulate the economizer dampers in sequence to maintain a setpoint 2°F (adj.) less than the supply air temperature setpoint. The outside air dampers shall maintain a minimum adjustable open position propotional to scheduled outside air open whenever occupied.
The economizer shall be enabled whenever:
Outside air temperature is less than 65°F (adj.).
AND the outside air enthalpy is less than 22 Btu/lb (adj.)
AND the outside air temperature is less than the return air temperature.
AND the outside air enthalpy is less than the return air enthalpy.
AND the supply fan status is on.
The economizer shall close whenever:
Mixed air temperature drops from 40°F to 35°F (adj.)
OR the freezestat is on.
OR on loss of supply fan status.
The outside and exhaust air dampers shall close and the return air damper shall open when the unit is off. During Optimal Start Up, the mixed air damper shall operate as described in the occupied mode except that the outside air damper shall modulate to fully closed.
Minimum Outside Air Ventilation - Fixed Percentage:
The outside air dampers shall maintain a minimum adjustable position during building occupied hours and be closed during unoccupied hours.
Dehumidification:
The controller shall measure the return air humidity and override the cooling sequence to maintain return air humidity at or below 60% rh (adj.) and is disbaled at 54 [%RH] (adj.). Dehumidification shall be enabled whenever the supply fan status is on, and there is a less than 40% (adj.) demand for cooling.
Mixed Air Temperature:
The controller shall monitor the mixed air temperature and use as required for economizer control
Alarms shall be provided as follows:
High Mixed Air Temp: If the mixed air temperature is greater than 90°F (adj.).
Low Mixed Air Temp: If the mixed air temperature is less than 45°F (adj.).
Return Air Humidity:
The controller shall monitor the return air humidity and use as required for economizer control or humidity control .
Alarms shall be provided as follows:
High Return Air Humidity: If the return air humidity is greater than 70% (adj.).
Low Return Air Humidity: If the return air humidity is less than 35% (adj.).
Return Air Temperature:
The controller shall monitor the return air temperature and use as required for setpoint control or economizer control (if present).
Alarms shall be provided as follows:
High Return Air Temp: If the return air temperature is greater than 90°F (adj.).
Low Return Air Temp: If the return air temperature is less than 45°F (adj.).
Supply Air Temperature:
The controller shall monitor the supply air temperature.
Alarms shall be provided as follows:
High Supply Air Temp: If the supply air temperature is greater than °F (adj.).
Low Supply Air Temp: If the supply air temperature is less than °F (adj.).
Optimal Start:
The BAS will monitor the scheduled occupied time, occupied space setpoints and space temperature to calculate when the optimal start occurs.
Staggered start:
This application shall prevent all controlled equipment from simultaneously restarting after a power outage or fire alarm restart. The order in which equipment (or groups of equipment) is started and the time delay between starts shall be user-selectable.
Morning Warm-Up Mode:
During optimal start, if the space temperature is below the occupied heating setpoint a morning warm-up mode will be activated, enabling the heating and supply fan. The outside air damper will remain closed. When the space temperature reaches setpoint of 70°F (adj.), the unit will transition to the occupied mode. Dehumidification is suspended during this mode.
Morning Cool-Down Mode:
During optimal start, if the space temperature is above the occupied cooling setpoint, morning cool-down mode will be activated, enabling the fan and cooling or economizer. The outside air damper will remain closed, unless economizing. When the space temperature reaches occupied cooling setpoint of 74°F (adj.), the unit will transition to the occupied mode.
System Shutdown:
On a signal from the BMS or from the fire alarm system the RTU shall be shutdown with the supply fan de-energized and the O.A. damper shall be closed. Upon fire alarm reset, unit shall return to operating mode.
High Static Shutdown:
The unit shall shut down and generate an alarm upon receiving an high static shutdown signal.
Freeze Protection:
The unit shall shut down and generate an alarm upon receiving a freezestat status.
Filter status:
A differential pressure switch will monitor the differential pressure across the filter when the fan is running. If the switch closes for 2 minutes after a request for fan operation a dirty filter alarm will be annunciated at the BMS. Set the differential pressure switch to close at a differential pressure of 0.9" WC (adj.).

POINTS LIST (PMU-1)

| | HARDWARE POINTS | | | | SOFTWARE POINTS | | | | | | |
|---|---|---|---|---|---|---|---|---|---|---|---|
| POINT NAME | AI | AO | BI | BO | AV | BV | LOOP | SCHED | TREND | ALARM | SHOW ON GRAPHIC |
| SUPPLY AIR TEMPERATURE | X | | | | | | | | X | | X |
| SUPPLY AIR STATIC PRESSURE | X | | | | | | | | X | X | X |
| RETURN AIR TEMPERATURE | X | | | | | | | | X | | X |
| MIXED AIR TEMPERATURE | X | | | | | | | | X | | X |
| RETURN AIR HUMIDITY | X | | | | | | | | X | | X |
| COMPRESSOR 1 STATUS | | | X | | | | | | X | | X |
| COMPRESSOR 2 STATUS | | | X | | | | | | X | | X |
| GAS HEATING STAGE 1 ON/OFF | | | | X | | | | | X | | X |
| GAS HEATING STAGE 2 ON/OFF | | | | X | | | | | X | | X |
| HOT GAS REHEAT ENABLE | | | | X | | | | | X | | X |
| HOT GAS REHEAT MODULATION | | X | | | | | | | X | | X |
| HOT GAS REHEAT STATUS | | | X | | | | | | X | | X |
| OUTSIDE AIR HUMIDITY | X | | | | | | | | X | | X |
| OUTSIDE AIR TEMPERATURE | X | | | | | | | | X | | X |
| ECONOMIZER STATUS | | | X | | | | | | X | | X |
| SUPPLY AIR STATIC PRESSURE | X | | | | | | | | X | X | X |
| SUPPLY AIR TEMPERATURE | X | | | | | | | | X | | X |
| MIXED AIR DAMPER ENABLE/DISABLE | | | | X | | | | | X | | X |
| MIXED AIR DAMPER POSITION | | | X | | | | | | X | | X |
| FREEZESTAT | | | X | | | | | | | X | X |
| SUPPLY AIR SMOKE DETECTOR | | | X | | | | | | X | X | X |
| FAN VFD SPEED | | X | | | | | | | X | | X |
| FAN START/STOP | | | | X | | | | | X | | X |
| FAN STATUS | | | X | | | | | | X | | X |
| SUPPLY FAN VFD FAULT | | | X | | | | | | | X | X |
| DEHUMIDIFICATION SETPOINT | | | | | X | | | | X | | X |
| ECONOMIZER MIXED AIR TEMP SETPOINT | | | | | X | | | | X | | X |
| SUPPLY AIR TEMP SETPOINT | | | | | X | | | | X | | X |
| EMERGENCY SHUTDOWN | | | | | | X | | | X | X | X |
| HIGH MIXED AIR TEMP | | | | | | | | | | X | |
| HIGH RETURN AIR TEMP | | | | | | | | | | X | |
| HIGH SUPPLY AIR STATIC PRESSURE | | | | | | | | | | X | |
| HIGH SUPPLY AIR TEMP | | | | | | | | | | X | |
| LOW MIXED AIR TEMP | | | | | | | | | | X | |
| LOW RETURN AIR HUMIDITY | | | | | | | | | | X | |
| LOW RETURN AIR TEMP | | | | | | | | | | X | |
| LOW SUPPLY AIR STATIC PRESSURE | | | | | | | | | | X | |
| LOW SUPPLY AIR TEMP | | | | | | | | | | X | |
| FILTER DIFFERENTIAL PRESSURE | | | X | | | | | | X | X | X |
| UNIT ALARM | | | | | | | | | | X | X |
| SUPPLY FAN FAILURE | | | | | | | | | | X | |
| SUPPLY FAN IN HAND | | | | | | | | | | X | |

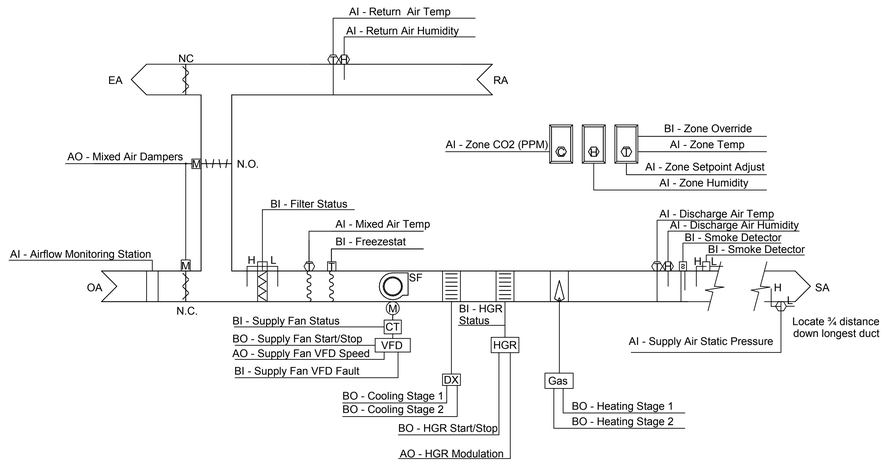


1 CONTROLS - PMU-1 (VAV)
NTS

VAV BOX Sequence of Operation (VAV)

The Building Management System (BMS) will send the controller a user definable run schedule. If the BMS is not present, or communication is lost, the controller will operate using last known sequence.
Run Conditions - Schedule:
The unit shall run according to a user definable time schedule in the following modes:
Occupied Mode:
The unit shall maintain the following space temperature setpoints: A 74°F (adj.) cooling setpoint and a 70°F (adj.) heating setpoint.
Unoccupied Mode:
The unit shall maintain the following NSB space temperature setpoints: A 79°F (adj.) cooling setpoint and a 65°F (adj.) heating setpoint.
Flow control:
Occupied: When zone temperature is greater than its cooling setpoint, the zone damper shall modulate between the minimum occupied airflow (adj.) and the maximum cooling airflow (adj.) until the zone is satisfied.
When the zone temperature is between the cooling setpoint and the heating setpoint, the zone damper shall maintain the minimum scheduled zone ventilation (adj.).
When zone temperature is less than its heating setpoint, the zone damper shall modulate minimum occupied airflow (adj.) and the maximum heating airflow (adj.) until the zone is satisfied.
When cold air is available from the AHU, and zone is satisfied, the zone damper shall modulate to the minimum occupied airflow (adj.). If more heat is required, the zone damper shall modulate to the auxiliary heating airflow (adj.) and stage heating until the zone is satisfied.
Unoccupied: When the zone is unoccupied the zone damper shall control to its minimum airflow (adj.). When the zone temperature is greater than its cooling setpoint, the zone damper shall modulate between the minimum unoccupied airflow (adj.) and the maximum cooling airflow (adj.) until the zone is satisfied. When zone temperature is less than its unoccupied heating setpoint, the controller shall enable heating to maintain the zone temperature at the setpoint. The zone damper shall adjust to auxiliary heating airflow (adj.) until the zone is satisfied.
Electrical reheat stages:
The controller shall measure the zone temperature and stage the reheating to maintain its setpoint. To prevent short cycling, there shall be a user definable (adj.) delay between stages, and each stage shall have a user definable (adj.) minimum runtime.
The reheating shall be enabled whenever:
Outside air temperature is less than 65°F (adj.).
AND the zone temperature is below setpoint.
AND sufficient airflow is provided.
Zone Setpoint Adjust:
The occupant shall be able to adjust the zone temperature heating and cooling setpoints +/-2°F at the zone sensor.
Zone Unoccupied Override:
A timed local override control shall allow an occupant to override the schedule and place the unit into an occupied mode for 2 hours (adj.). At the expiration of this time, control of the unit shall automatically return to the schedule.
Discharge Air Temperature:
The controller shall monitor the discharge air temperature.
Alarms shall be provided as follows:
High Discharge Air Temp: If the discharge air temperature is greater than °F (adj.).
Low Discharge Air Temp: If the discharge air temperature is less than °F (adj.).

VAV-1 thru 7

| | HARDWARE POINTS | | | | SOFTWARE POINTS | | | | | | |
|---|---|---|---|---|---|---|---|---|---|---|---|
| POINT NAME | AI | AO | BI | BO | AV | BV | LOOP | SCHED | TREND | ALARM | SHOW ON GRAPHIC |
| ZONE TEMPERATURE | X | | | | | | | | X | | X |
| ZONE SETPOINT ADJUST | X | | | | | | | | X | | X |
| AIRFLOW | X | | | | | | | | X | | X |
| SRC HEAT CONTROL | | | | X | | | | | X | | X |
| AIRFLOW SETPOINT | | | | | X | | | | X | | X |
| COOLING SETPOINT | | | | | X | | | | X | | X |
| HEATING SETPOINT | | | | | X | | | | X | | X |
| ZONE DAMPER | | X | | | | | | | X | | X |
| HEATING MODE | | | | | | X | | | X | | X |
| SCHEDULE | | | | | | | | X | | | |

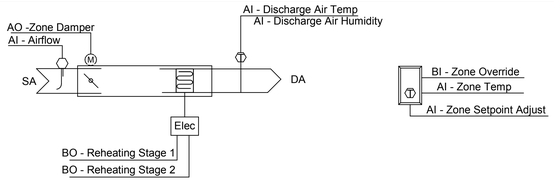


2 CONTROLS - VAV BOX
NTS

| | |
|---|---|
| SA&E PROJECT NUMBER | 01-697-027 |
| BID PACKAGE | OPTION A |
| ISSUED FOR CONSTRUCTION | 04-08-2019 |

REVISIONS

| R # | Doc # | Date |
|---|---|---|
| | | |


Southern A&E LLC
7951 Troon Circle
Austell, Ga 30168
(770) 819-7777
architects & engineers



© COPYRIGHT 2018 BY SOUTHERN A&E, LLC. ALL RIGHTS RESERVED.
THIS DOCUMENT IS THE PROPERTY OF SOUTHERN A&E, LLC. AND SHALL NOT BE COPIED OR REPRODUCED IN WHOLE OR IN PART WITHOUT EXPRESSED WRITTEN CONSENT FROM SOUTHERN A&E, LLC.


NEW FIELD HOUSE FOR:

# UNION COUNTY FIELDHOUSE

153 PANTHER WAY, BLAIRSVILLE, GA 30512

UNION COUNTY SCHOOLS

124 HUGHES STREET BLAIRSVILLE, GA 30512

STATE OF GEORGIA
GREG SCHLANGER
CERTIFICATE No. 025818
REGISTERED ARCHITECT

GEORGIA
REGISTERED
ENGINEER
CHAEL C. WALDBILLIG

DRAWING NUMBER

M702a